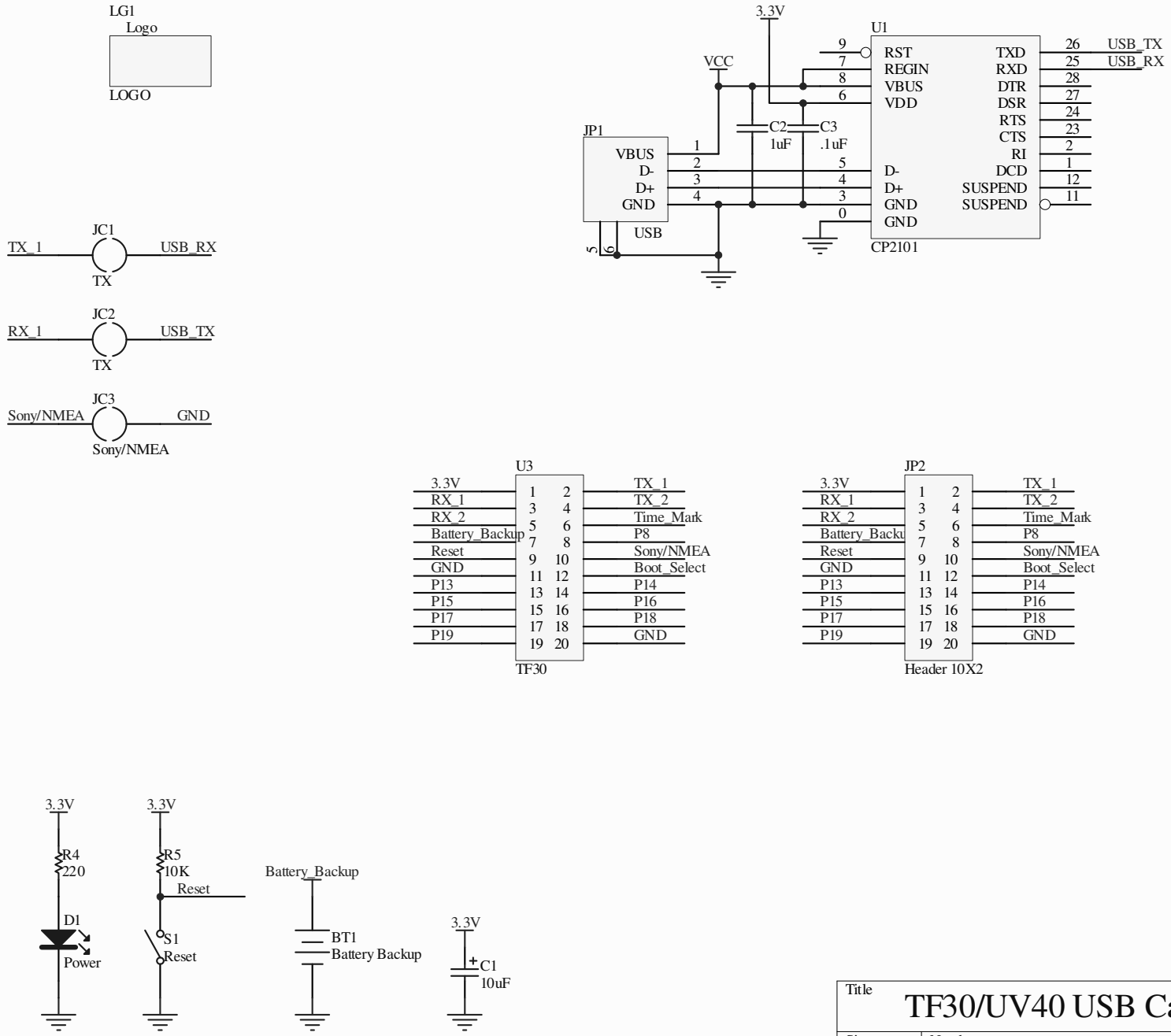
LG1
Logo
LOGO
3.3V
U1
VCC
RST
REGIN
VBUS
VDD
TXD
RXD
DTR
DSR
RTS
CTS
RI
DCD
SUSPEND
SUSPEND
D-
D+
GND
GND
USB_TX
USB_RX
JP1
VBUS
D-
D+
GND
USB
C2
1uF
C3
.1uF
CP2101
TX_1
JC1
USB_RX
TX
RX_1
JC2
USB_TX
TX
Sony/NMEA
JC3
GND
Sony/NMEA
U3
3.3V
RX_1
RX_2
Battery_Backup
Reset
GND
P13
P15
P17
P19
TX_1
TX_2
Time_Mark
P8
Sony/NMEA
Boot_Select
P14
P16
P18
GND
TF30
JP2
Header 10X2
R4
220
D1
Power
R5
10K
Reset
S1
Reset
Battery_Backup
BT1
Battery Backup
C1
10uF
Title
TF30/UV40 USB Carrier Board
Size
A
Number
Spark Fun Electronics
Revision
Date: 4/6/2005
Sheet of
File: D:\Projects\..\UV40 Carrier - v04.SchDoc
Drawn By: